2019.09

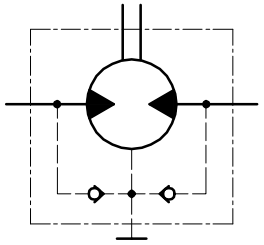

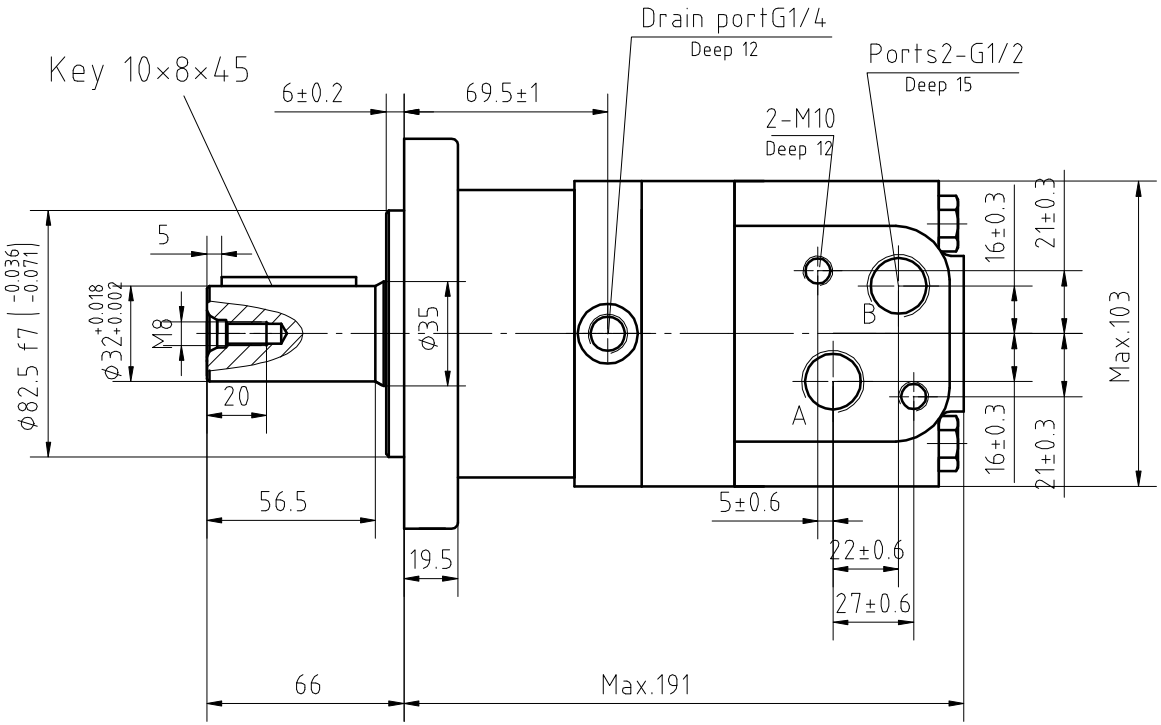

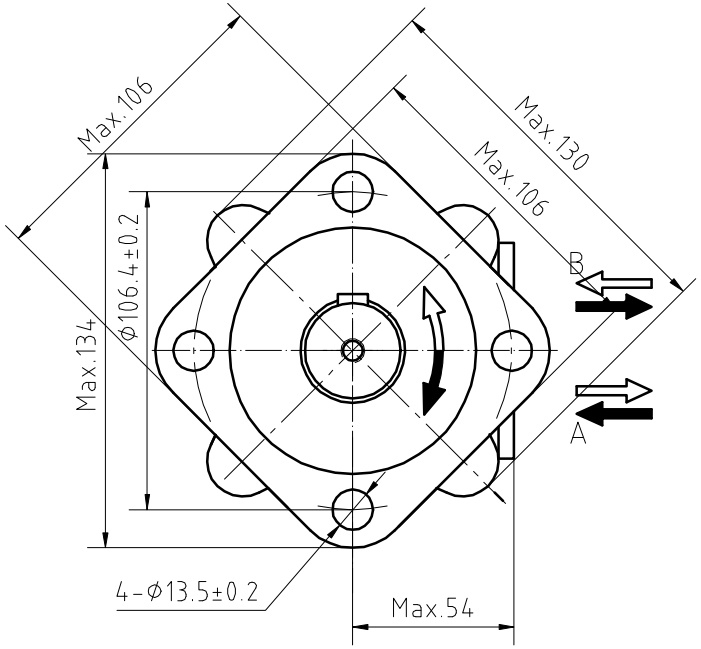

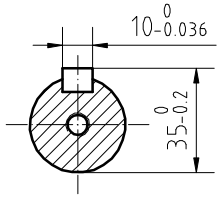

Displacement(ml/r)	200.9
Max.cont.Pressure drop(bar)	160
Max.cont.torque(N.m)	438
Max.flow(L/min)	75
Max.speed(r/min)	370
Max.OutPut.Power(Kw)	14

NINGBO ZHONGYI HYDRAULIC MOTOR CO.,LTD.

BM3Y-200P10AY/T11